Unit 2: Locomotion
Kinematics of Wheeled Robots: Part 2

Computer Science 4766/6912

Department of Computer Science
Memorial University of Newfoundland

May 23, 2018

1. Robot Kinematic Constraints
   - Example: A Differential-Drive Robot
   - Example: A Turning Bicycle
   - Using the Forward Kinematic Equation

Robot Kinematic Constraints

- The kinematic constraints on a robot come from the combination of constraints from its wheels:

Robot Kinematic Constraints

- The kinematic constraints on a robot come from the combination of constraints from its wheels:
  - The rolling constraint:

$$[\sin(\alpha+\beta) \;\; -\cos(\alpha+\beta) \;\; (-l)\cos(\beta)]\,\dot{\boldsymbol{\xi}}_{\boldsymbol{R}} = r\dot{\phi}$$

Robot Kinematic Constraints

- The kinematic constraints on a robot come from the combination of constraints from its wheels:
  - The rolling constraint:

$$[\sin(\alpha+\beta) \;\; -\cos(\alpha+\beta) \;\; (-l)\cos(\beta)]\,\dot{\boldsymbol{\xi}}_{\boldsymbol{R}} = r\dot{\phi}$$

Robot Kinematic Constraints

- The kinematic constraints on a robot come from the combination of constraints from its wheels:
  - The rolling constraint:

$$[\sin(\alpha+\beta) \;\; -\cos(\alpha+\beta) \;\; (-l)\cos(\beta)]\,\dot{\boldsymbol{\xi}}_{\boldsymbol{R}} = r\dot{\phi}$$

  - The sliding constraint:

$$[\cos(\alpha+\beta) \;\; \sin(\alpha+\beta) \;\; l\sin(\beta)]\,\dot{\boldsymbol{\xi}}_{\boldsymbol{R}} = 0$$

Robot Kinematic Constraints

- The kinematic constraints on a robot come from the combination of constraints from its wheels:
  - The rolling constraint:

$$[\sin(\alpha+\beta) \;\; -\cos(\alpha+\beta) \;\; (-l)\cos(\beta)]\,\dot{\boldsymbol{\xi}}_{\boldsymbol{R}} = r\dot{\phi}$$

  - The sliding constraint:

$$[\cos(\alpha+\beta) \;\; \sin(\alpha+\beta) \;\; l\sin(\beta)]\,\dot{\boldsymbol{\xi}}_{\boldsymbol{R}} = 0$$

Robot Kinematic Constraints

- The kinematic constraints on a robot come from the combination of constraints from its wheels:
  - The rolling constraint:

$$[\sin(\alpha+\beta) \;\; -\cos(\alpha+\beta) \;\; (-l)\cos(\beta)]\,\dot{\boldsymbol{\xi}}_{\boldsymbol{R}} = r\dot{\phi}$$

  - The sliding constraint:

$$[\cos(\alpha+\beta) \;\; \sin(\alpha+\beta) \;\; l\sin(\beta)]\,\dot{\boldsymbol{\xi}}_{\boldsymbol{R}} = 0$$

- Castor, Swedish, and spherical wheels impose no constraints

Robot Kinematic Constraints

- The kinematic constraints on a robot come from the combination of constraints from its wheels:
  - The rolling constraint:

$$[\sin(\alpha+\beta) \;\; -\cos(\alpha+\beta) \;\; (-l)\cos(\beta)]\,\dot{\boldsymbol{\xi}}_{\boldsymbol{R}} = r\dot{\phi}$$

  - The sliding constraint:

$$[\cos(\alpha+\beta) \;\; \sin(\alpha+\beta) \;\; l\sin(\beta)]\,\dot{\boldsymbol{\xi}}_{\boldsymbol{R}} = 0$$

- Castor, Swedish, and spherical wheels impose no constraints
- Therefore we consider only constraints from fixed and steerable standard wheels

Robot Kinematic Constraints

- The kinematic constraints on a robot come from the combination of constraints from its wheels:
  - The rolling constraint:

$$[\sin(\alpha+\beta) \;\; -\cos(\alpha+\beta) \;\; (-l)\cos(\beta)]\,\dot{\boldsymbol{\xi}}_{\boldsymbol{R}} = r\dot{\phi}$$

  - The sliding constraint:

$$[\cos(\alpha+\beta) \;\; \sin(\alpha+\beta) \;\; l\sin(\beta)]\,\dot{\boldsymbol{\xi}}_{\boldsymbol{R}} = 0$$

- Castor, Swedish, and spherical wheels impose no constraints
- Therefore we consider only constraints from fixed and steerable standard wheels
- For each wheel, we have both rolling and sliding constraints; Therefore, two equations per wheel

Robot Kinematic Constraints

- The kinematic constraints on a robot come from the combination of constraints from its wheels:
  - The rolling constraint:

$$[\sin(\alpha+\beta) \;\; -\cos(\alpha+\beta) \;\; (-l)\cos(\beta)]\,\dot{\boldsymbol{\xi}}_{\boldsymbol{R}} = r\dot{\phi}$$

  - The sliding constraint:

$$[\cos(\alpha+\beta) \;\; \sin(\alpha+\beta) \;\; l\sin(\beta)]\,\dot{\boldsymbol{\xi}}_{\boldsymbol{R}} = 0$$

- Castor, Swedish, and spherical wheels impose no constraints
- Therefore we consider only constraints from fixed and steerable standard wheels
- For each wheel, we have both rolling and sliding constraints; Therefore, two equations per wheel
- We stack all of these constraints together into matrix form as illustrated in the examples that follow...

Example: A Differential-Drive Robot

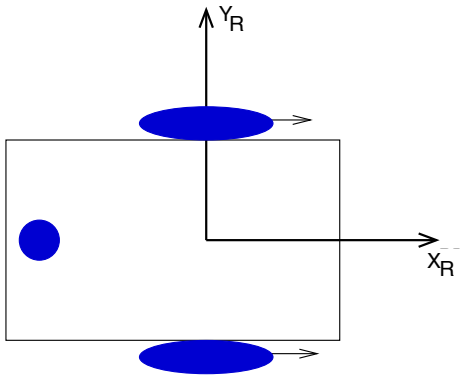

Example: A Differential-Drive Robot

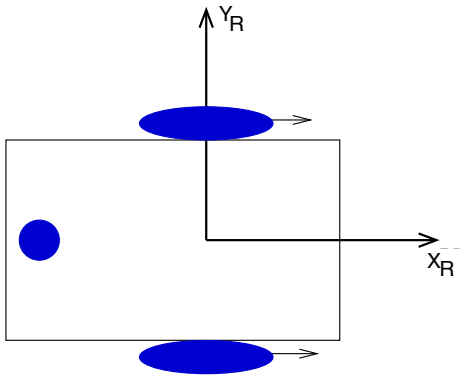

- Our D-D robot has two fixed standard wheels, plus a Castor wheel for stability (plays no part in the analysis)

Example: A Differential-Drive Robot

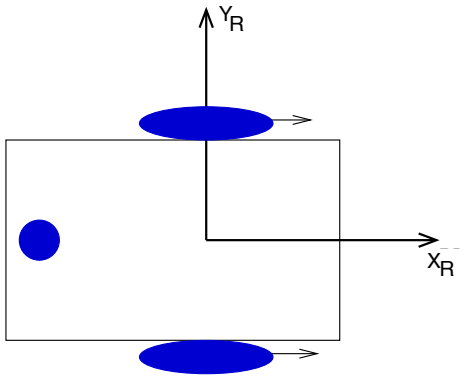

- Our D-D robot has two fixed standard wheels, plus a Castor wheel for stability (plays no part in the analysis)
- The parameters of the two FSW's are as follows:

Example: A Differential-Drive Robot

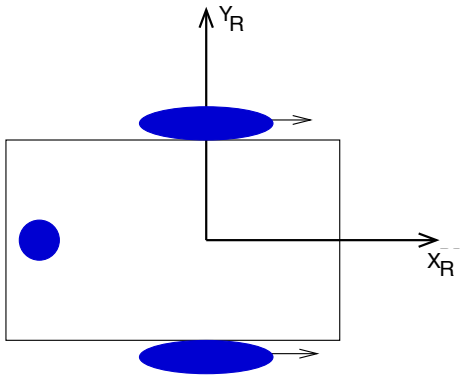

- Our D-D robot has two fixed standard wheels, plus a Castor wheel for stability (plays no part in the analysis)
- The parameters of the two FSW's are as follows:
  - Right wheel:

Example: A Differential-Drive Robot

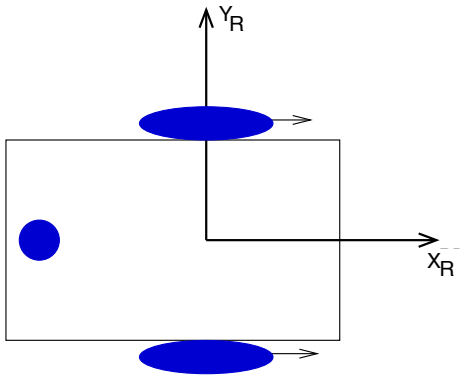

- Our D-D robot has two fixed standard wheels, plus a Castor wheel for stability (plays no part in the analysis)
- The parameters of the two FSW's are as follows:
  - Right wheel:
    - $\alpha_r = -\frac{\pi}{2}$

Example: A Differential-Drive Robot

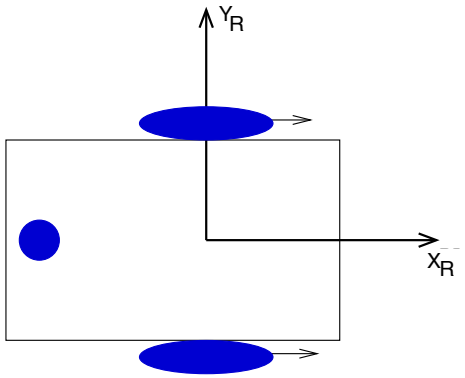

- Our D-D robot has two fixed standard wheels, plus a Castor wheel for stability (plays no part in the analysis)
- The parameters of the two FSW's are as follows:
  - Right wheel:
    - $\alpha_r = -\frac{\pi}{2}$
    - $\beta_r = \pi$ (+ve spin should cause movement in + X_R direction)

Example: A Differential-Drive Robot

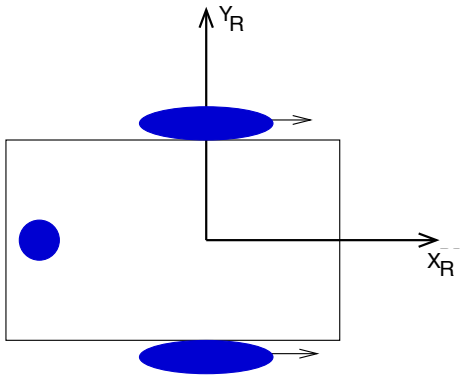

- Our D-D robot has two fixed standard wheels, plus a Castor wheel for stability (plays no part in the analysis)
- The parameters of the two FSW's are as follows:
  - Right wheel:
    - $\alpha_r = -\frac{\pi}{2}$
    - $\beta_r = \pi$ (+ve spin should cause movement in + X_R direction)

Example: A Differential-Drive Robot

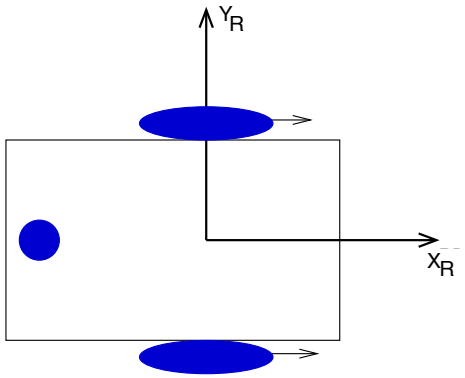

- Our D-D robot has two fixed standard wheels, plus a Castor wheel for stability (plays no part in the analysis)
- The parameters of the two FSW's are as follows:
  - Right wheel:
    - $\alpha_r = -\frac{\pi}{2}$
    - $\beta_r = \pi$ (+ve spin should cause movement in + X_R direction)
  - Left wheel:

Example: A Differential-Drive Robot

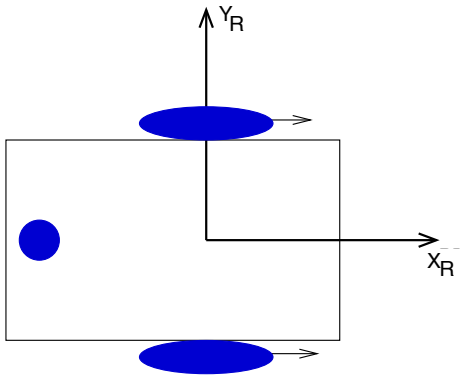

- Our D-D robot has two fixed standard wheels, plus a Castor wheel for stability (plays no part in the analysis)
- The parameters of the two FSW's are as follows:
  - Right wheel:
    - $\alpha_r = -\frac{\pi}{2}$
    - $\beta_r = \pi$ (+ve spin should cause movement in + X_R direction)
  - Left wheel:
    - $\alpha_l = \frac{\pi}{2}$

Example: A Differential-Drive Robot

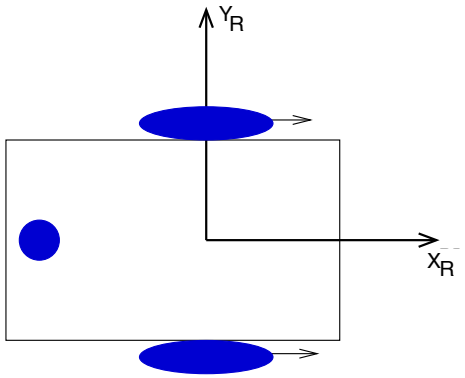

- Our D-D robot has two fixed standard wheels, plus a Castor wheel for stability (plays no part in the analysis)
- The parameters of the two FSW's are as follows:
  - Right wheel:
    - $\alpha_r = -\frac{\pi}{2}$
    - $\beta_r = \pi$ (+ve spin should cause movement in + X_R direction)
  - Left wheel:
    - $\alpha_l = \frac{\pi}{2}$
    - $\beta_l = 0$

Example: A Differential-Drive Robot

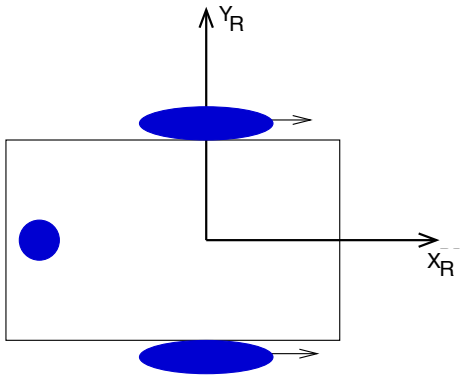

- Our D-D robot has two fixed standard wheels, plus a Castor wheel for stability (plays no part in the analysis)
- The parameters of the two FSW's are as follows:
  - Right wheel:
    - $\alpha_r = -\frac{\pi}{2}$
    - $\beta_r = \pi$ (+ve spin should cause movement in + X_R direction)
  - Left wheel:
    - $\alpha_l = \frac{\pi}{2}$
    - $\beta_l = 0$
- Assume that the two wheels are equidistant from P at a distance of l

Here are the rolling constraints for both wheels:

Here are the rolling constraints for both wheels:

$$\begin{aligned}
\begin{bmatrix} \sin(\alpha_r + \beta_r) & -\cos(\alpha_r + \beta_r) & (-l)\cos(\beta_r) \end{bmatrix} \dot{\boldsymbol{\xi}}_{\boldsymbol{R}} &= r\dot{\phi}_r \\
\begin{bmatrix} \sin(\alpha_l + \beta_l) & -\cos(\alpha_l + \beta_l) & (-l)\cos(\beta_l) \end{bmatrix} \dot{\boldsymbol{\xi}}_{\boldsymbol{R}} &= r\dot{\phi}_l
\end{aligned}$$

Here are the rolling constraints for both wheels:

$$\begin{aligned}
\begin{bmatrix} \sin(\alpha_r + \beta_r) & -\cos(\alpha_r + \beta_r) & (-l)\cos(\beta_r) \end{bmatrix} \dot{\boldsymbol{\xi}}_{\boldsymbol{R}} &= r\dot{\phi}_r \\
\begin{bmatrix} \sin(\alpha_l + \beta_l) & -\cos(\alpha_l + \beta_l) & (-l)\cos(\beta_l) \end{bmatrix} \dot{\boldsymbol{\xi}}_{\boldsymbol{R}} &= r\dot{\phi}_l
\end{aligned}$$

Now the sliding constraints:

Here are the rolling constraints for both wheels:

$$\begin{aligned}
\begin{bmatrix} \sin(\alpha_r + \beta_r) & -\cos(\alpha_r + \beta_r) & (-l)\cos(\beta_r) \end{bmatrix} \dot{\boldsymbol{\xi}}_{\boldsymbol{R}} &= r\dot{\phi}_r \\
\begin{bmatrix} \sin(\alpha_l + \beta_l) & -\cos(\alpha_l + \beta_l) & (-l)\cos(\beta_l) \end{bmatrix} \dot{\boldsymbol{\xi}}_{\boldsymbol{R}} &= r\dot{\phi}_l
\end{aligned}$$

Now the sliding constraints:

$$\begin{aligned}
\begin{bmatrix} \cos(\alpha_r + \beta_r) & \sin(\alpha_r + \beta_r) & l\sin(\beta_r) \end{bmatrix} \dot{\boldsymbol{\xi}}_{\boldsymbol{R}} &= 0 \\
\begin{bmatrix} \cos(\alpha_l + \beta_l) & \sin(\alpha_l + \beta_l) & l\sin(\beta_l) \end{bmatrix} \dot{\boldsymbol{\xi}}_{\boldsymbol{R}} &= 0
\end{aligned}$$

Here are the rolling constraints for both wheels:

$$\begin{aligned}
\begin{bmatrix} \sin(\alpha_r + \beta_r) & -\cos(\alpha_r + \beta_r) & (-l)\cos(\beta_r) \end{bmatrix} \dot{\boldsymbol{\xi}}_{\boldsymbol{R}} &= r\dot{\phi}_r \\
\begin{bmatrix} \sin(\alpha_l + \beta_l) & -\cos(\alpha_l + \beta_l) & (-l)\cos(\beta_l) \end{bmatrix} \dot{\boldsymbol{\xi}}_{\boldsymbol{R}} &= r\dot{\phi}_l
\end{aligned}$$

Now the sliding constraints:

$$\begin{aligned}
\begin{bmatrix} \cos(\alpha_r + \beta_r) & \sin(\alpha_r + \beta_r) & l\sin(\beta_r) \end{bmatrix} \dot{\boldsymbol{\xi}}_{\boldsymbol{R}} &= 0 \\
\begin{bmatrix} \cos(\alpha_l + \beta_l) & \sin(\alpha_l + \beta_l) & l\sin(\beta_l) \end{bmatrix} \dot{\boldsymbol{\xi}}_{\boldsymbol{R}} &= 0
\end{aligned}$$

Combine all of the above into one big equation:

Here are the rolling constraints for both wheels:

$$\begin{aligned}
\begin{bmatrix} \sin(\alpha_r + \beta_r) & -\cos(\alpha_r + \beta_r) & (-l)\cos(\beta_r) \end{bmatrix} \dot{\boldsymbol{\xi}}_{\boldsymbol{R}} &= r\dot{\phi}_r \\
\begin{bmatrix} \sin(\alpha_l + \beta_l) & -\cos(\alpha_l + \beta_l) & (-l)\cos(\beta_l) \end{bmatrix} \dot{\boldsymbol{\xi}}_{\boldsymbol{R}} &= r\dot{\phi}_l
\end{aligned}$$

Now the sliding constraints:

$$\begin{aligned}
\begin{bmatrix} \cos(\alpha_r + \beta_r) & \sin(\alpha_r + \beta_r) & l\sin(\beta_r) \end{bmatrix} \dot{\boldsymbol{\xi}}_{\boldsymbol{R}} &= 0 \\
\begin{bmatrix} \cos(\alpha_l + \beta_l) & \sin(\alpha_l + \beta_l) & l\sin(\beta_l) \end{bmatrix} \dot{\boldsymbol{\xi}}_{\boldsymbol{R}} &= 0
\end{aligned}$$

Combine all of the above into one big equation:

$$\begin{bmatrix} \sin(\alpha_r + \beta_r) & -\cos(\alpha_r + \beta_r) & (-l)\cos(\beta_r) \\ \sin(\alpha_l + \beta_l) & -\cos(\alpha_l + \beta_l) & (-l)\cos(\beta_l) \\ \cos(\alpha_r + \beta_r) & \sin(\alpha_r + \beta_r) & l\sin(\beta_r) \\ \cos(\alpha_l + \beta_l) & \sin(\alpha_l + \beta_l) & l\sin(\beta_l) \end{bmatrix} \dot{\boldsymbol{\xi}}_{\boldsymbol{R}} = r \begin{bmatrix} \dot{\phi}_r \\ \dot{\phi}_l \\ 0 \\ 0 \end{bmatrix}$$

Our overall equation is,

Our overall equation is,

$$\begin{bmatrix} 1 & 0 & l \\ 1 & 0 & -l \\ 0 & 1 & 0 \\ 0 & 1 & 0 \end{bmatrix} \dot{\boldsymbol{\xi}}_{\boldsymbol{R}} = r \begin{bmatrix} \dot{\phi}_r \\ \dot{\phi}_l \\ 0 \\ 0 \end{bmatrix}$$

Our overall equation is,

$$\begin{bmatrix} 1 & 0 & l \\ 1 & 0 & -l \\ 0 & 1 & 0 \\ 0 & 1 & 0 \end{bmatrix} \dot{\boldsymbol{\xi}}_{\boldsymbol{R}} = r \begin{bmatrix} \dot{\phi}_r \\ \dot{\phi}_l \\ 0 \\ 0 \end{bmatrix}$$

We solve for $\dot{\boldsymbol{\xi}}_{\boldsymbol{R}}$.

COVERED ON BOARD

Example: A Turning Bicycle

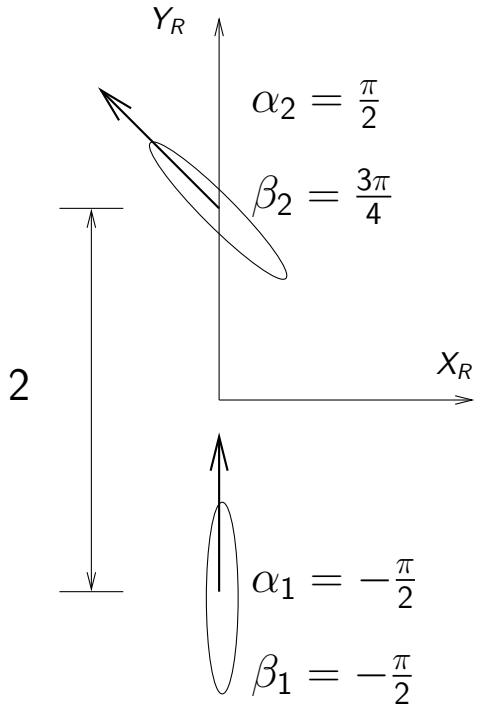

A bicycle with its front wheel locked in a left turn

Example: A Turning Bicycle

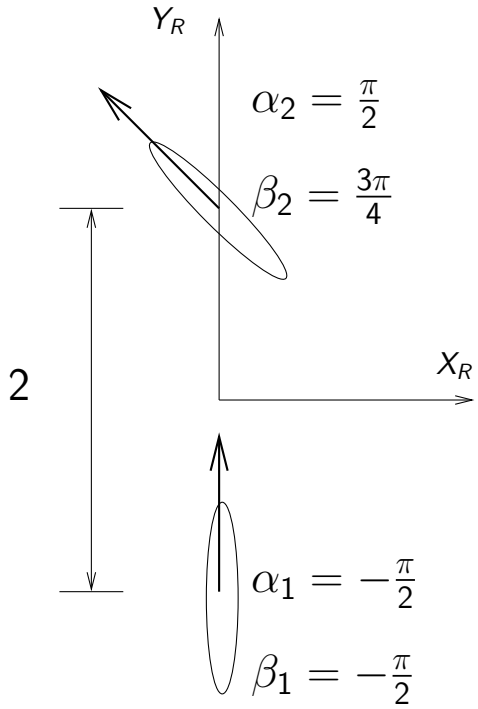

A bicycle with its front wheel locked in a left turn

$$\begin{bmatrix} \sin(\alpha_1+\beta_1) & -\cos(\alpha_1+\beta_1) & (-l_1)\cos(\beta_1) \\ \sin(\alpha_2+\beta_2) & -\cos(\alpha_2+\beta_2) & (-l_2)\cos(\beta_2) \\ \cos(\alpha_1+\beta_1) & \sin(\alpha_1+\beta_1) & l_1\sin(\beta_1) \\ \cos(\alpha_2+\beta_2) & \sin(\alpha_2+\beta_2) & l_2\sin(\beta_2) \end{bmatrix} \dot{\boldsymbol{\xi}}_R = r \begin{bmatrix} \dot{\phi}_1 \\ \dot{\phi}_2 \\ 0 \\ 0 \end{bmatrix}$$

$$\begin{bmatrix} 0 & 1 & 0 \\ -\sqrt{2}/2 & \sqrt{2}/2 & \sqrt{2}/2 \\ -1 & 0 & -1 \\ -\sqrt{2}/2 & -\sqrt{2}/2 & \sqrt{2}/2 \end{bmatrix} \dot{\boldsymbol{\xi}}_{\boldsymbol{R}} = r \begin{bmatrix} \dot{\phi}_1 \\ \dot{\phi}_2 \\ 0 \\ 0 \end{bmatrix}$$

$$\begin{bmatrix} 0 & 1 & 0 \\ -\sqrt{2}/2 & \sqrt{2}/2 & \sqrt{2}/2 \\ -1 & 0 & -1 \\ -\sqrt{2}/2 & -\sqrt{2}/2 & \sqrt{2}/2 \end{bmatrix} \dot{\boldsymbol{\xi}}_{\boldsymbol{R}} = r \begin{bmatrix} \dot{\phi}_1 \\ \dot{\phi}_2 \\ 0 \\ 0 \end{bmatrix}$$

We apply Gauss-Jordan elimination to determine both the solution, and the condition on the existence of the solution

$$\begin{bmatrix} 0 & 1 & 0 \\ -\sqrt{2}/2 & \sqrt{2}/2 & \sqrt{2}/2 \\ -1 & 0 & -1 \\ -\sqrt{2}/2 & -\sqrt{2}/2 & \sqrt{2}/2 \end{bmatrix} \dot{\boldsymbol{\xi}}_{\boldsymbol{R}} = r \begin{bmatrix} \dot{\phi}_1 \\ \dot{\phi}_2 \\ 0 \\ 0 \end{bmatrix}$$

We apply Gauss-Jordan elimination to determine both the solution, and the condition on the existence of the solution

$$\left[\begin{array}{ccc|c} 0 & 1 & 0 & r\ \dot{\phi}_1 \\ -\sqrt{2}/2 & \sqrt{2}/2 & \sqrt{2}/2 & r\ \dot{\phi}_2 \\ -1 & 0 & -1 & 0 \\ -\sqrt{2}/2 & -\sqrt{2}/2 & \sqrt{2}/2 & 0 \end{array}\right]$$

$$\begin{bmatrix} 0 & 1 & 0 \\ -\sqrt{2}/2 & \sqrt{2}/2 & \sqrt{2}/2 \\ -1 & 0 & -1 \\ -\sqrt{2}/2 & -\sqrt{2}/2 & \sqrt{2}/2 \end{bmatrix} \dot{\boldsymbol{\xi}}_{\boldsymbol{R}} = r \begin{bmatrix} \dot{\phi}_1 \\ \dot{\phi}_2 \\ 0 \\ 0 \end{bmatrix}$$

We apply Gauss-Jordan elimination to determine both the solution, and the condition on the existence of the solution

$$\left[\begin{array}{ccc|c} 0 & 1 & 0 & r\ \dot{\phi}_1 \\ -\sqrt{2}/2 & \sqrt{2}/2 & \sqrt{2}/2 & r\ \dot{\phi}_2 \\ -1 & 0 & -1 & 0 \\ -\sqrt{2}/2 & -\sqrt{2}/2 & \sqrt{2}/2 & 0 \end{array}\right] \rightarrow \text{row exchanges and combinations}$$

After a number of steps, we arrive at,

$$\left[\begin{array}{ccc|c} 1 & 0 & 0 & -r\dot{\phi}_1/2 \\ 0 & 1 & 0 & r\dot{\phi}_1 \\ 0 & 0 & 1 & r\dot{\phi}_1/2 \\ 0 & 0 & 0 & r\left(\frac{\sqrt{2}}{2}\dot{\phi}_2 - \dot{\phi}_1\right) \end{array}\right]$$

After a number of steps, we arrive at,

$$\left[\begin{array}{ccc|c} 1 & 0 & 0 & -r\dot{\phi}_1/2 \\ 0 & 1 & 0 & r\dot{\phi}_1 \\ 0 & 0 & 1 & r\dot{\phi}_1/2 \\ 0 & 0 & 0 & r\left(\frac{\sqrt{2}}{2}\dot{\phi}_2 - \dot{\phi}_1\right) \end{array}\right]$$

Yielding the following

After a number of steps, we arrive at,

$$\left[\begin{array}{ccc|c} 1 & 0 & 0 & -r\dot{\phi}_1/2 \\ 0 & 1 & 0 & r\dot{\phi}_1 \\ 0 & 0 & 1 & r\dot{\phi}_1/2 \\ 0 & 0 & 0 & r\left(\frac{\sqrt{2}}{2}\dot{\phi}_2 - \dot{\phi}_1\right) \end{array}\right]$$

Yielding the following

$$\dot{x}_R = -r\dot{\phi}_1/2, \qquad \dot{y}_R = r\dot{\phi}_1, \qquad \dot{\theta} = r\dot{\phi}_1/2,$$

After a number of steps, we arrive at,

$$\left[\begin{array}{ccc|c} 1 & 0 & 0 & -r\dot{\phi}_1/2 \\ 0 & 1 & 0 & r\dot{\phi}_1 \\ 0 & 0 & 1 & r\dot{\phi}_1/2 \\ 0 & 0 & 0 & r\left(\frac{\sqrt{2}}{2}\dot{\phi}_2 - \dot{\phi}_1\right) \end{array}\right]$$

Yielding the following

$$\dot{x}_R = -r\dot{\phi}_1/2, \qquad \dot{y}_R = r\dot{\phi}_1, \qquad \dot{\theta} = r\dot{\phi}_1/2,$$

$$\dot{\phi}_1 = \frac{\sqrt{2}}{2}\dot{\phi}_2$$

After a number of steps, we arrive at,

$$\left[\begin{array}{ccc|c} 1 & 0 & 0 & -r\dot{\phi}_1/2 \\ 0 & 1 & 0 & r\dot{\phi}_1 \\ 0 & 0 & 1 & r\dot{\phi}_1/2 \\ 0 & 0 & 0 & r\left(\frac{\sqrt{2}}{2}\dot{\phi}_2 - \dot{\phi}_1\right) \end{array}\right]$$

Yielding the following

$$\dot{x}_R = -r\dot{\phi}_1/2, \qquad \dot{y}_R = r\dot{\phi}_1, \qquad \dot{\theta} = r\dot{\phi}_1/2,$$

$$\dot{\phi}_1 = \frac{\sqrt{2}}{2}\dot{\phi}_2$$

This last equation is a condition on the existence of solutions; Unlike a differential drive robot, the two wheel speeds here cannot be set arbitrarily

Using the Forward Kinematic Equation

- Odometry:

Using the Forward Kinematic Equation

- Odometry:
  - One use for the forward kinematic equation is to allow a robot's current pose to be tracked (known as odometry or *dead reckoning*)

Using the Forward Kinematic Equation

- Odometry:
  - One use for the forward kinematic equation is to allow a robot's current pose to be tracked (known as odometry or *dead reckoning*)
  - Let us say we know $\xi_I(t)$ for the previous time step and we wish to determine the pose for current time t'

Using the Forward Kinematic Equation

- Odometry:
  - One use for the forward kinematic equation is to allow a robot's current pose to be tracked (known as odometry or *dead reckoning*)
  - Let us say we know $\xi_I(t)$ for the previous time step and we wish to determine the pose for current time t'
  - From the motors' optical encoders we can get an estimate of the wheels' current roll speeds: $\dot{\phi}_1$, $\dot{\phi}_2$, ...

Using the Forward Kinematic Equation

- Odometry:
  - One use for the forward kinematic equation is to allow a robot's current pose to be tracked (known as odometry or *dead reckoning*)
  - Let us say we know $\xi_I(t)$ for the previous time step and we wish to determine the pose for current time t'
  - From the motors' optical encoders we can get an estimate of the wheels' current roll speeds: $\dot{\phi}_1$, $\dot{\phi}_2$, ...
  - Using the forward kinematic equation we obtain: $\dot{\xi}_R$

Using the Forward Kinematic Equation

- Odometry:
  - One use for the forward kinematic equation is to allow a robot's current pose to be tracked (known as odometry or *dead reckoning*)
  - Let us say we know $\boldsymbol{\xi}_I(t)$ for the previous time step and we wish to determine the pose for current time t'
  - From the motors' optical encoders we can get an estimate of the wheels' current roll speeds: $\dot{\phi}_1$, $\dot{\phi}_2$, ...
  - Using the forward kinematic equation we obtain: $\dot{\boldsymbol{\xi}}_R$
  - We can obtain $\dot{\boldsymbol{\xi}}_I$ using our current estimate for θ

Using the Forward Kinematic Equation

- Odometry:
  - One use for the forward kinematic equation is to allow a robot's current pose to be tracked (known as odometry or *dead reckoning*)
  - Let us say we know $\boldsymbol{\xi}_I(t)$ for the previous time step and we wish to determine the pose for current time t'
  - From the motors' optical encoders we can get an estimate of the wheels' current roll speeds: $\dot{\phi}_1$, $\dot{\phi}_2$, ...
  - Using the forward kinematic equation we obtain: $\dot{\boldsymbol{\xi}}_R$
  - We can obtain $\dot{\boldsymbol{\xi}}_I$ using our current estimate for θ
  - We apply a first-order Taylor series expansion:

Using the Forward Kinematic Equation

- Odometry:
  - One use for the forward kinematic equation is to allow a robot's current pose to be tracked (known as odometry or *dead reckoning*)
  - Let us say we know $\boldsymbol{\xi}_I(t)$ for the previous time step and we wish to determine the pose for current time t'
  - From the motors' optical encoders we can get an estimate of the wheels' current roll speeds: $\dot{\phi}_1$, $\dot{\phi}_2$, ...
  - Using the forward kinematic equation we obtain: $\dot{\boldsymbol{\xi}}_R$
  - We can obtain $\dot{\boldsymbol{\xi}}_I$ using our current estimate for θ
  - We apply a first-order Taylor series expansion:

Using the Forward Kinematic Equation

- Odometry:
  - One use for the forward kinematic equation is to allow a robot's current pose to be tracked (known as odometry or *dead reckoning*)
  - Let us say we know $\boldsymbol{\xi}_I(t)$ for the previous time step and we wish to determine the pose for current time t'
  - From the motors' optical encoders we can get an estimate of the wheels' current roll speeds: $\dot{\phi}_1$, $\dot{\phi}_2$, ...
  - Using the forward kinematic equation we obtain: $\dot{\boldsymbol{\xi}}_R$
  - We can obtain $\dot{\boldsymbol{\xi}}_I$ using our current estimate for θ
  - We apply a first-order Taylor series expansion:

$$\boldsymbol{\xi}_I(t') = \boldsymbol{\xi}_I(t) + (t' - t)\dot{\boldsymbol{\xi}}_I(t) + \cdots$$

  - (The "$\cdots$" represents higher-order terms that we don't bother to include in a first-order approximation)

Using the Forward Kinematic Equation

- Odometry:
  - One use for the forward kinematic equation is to allow a robot's current pose to be tracked (known as odometry or *dead reckoning*)
  - Let us say we know $\boldsymbol{\xi}_I(t)$ for the previous time step and we wish to determine the pose for current time t'
  - From the motors' optical encoders we can get an estimate of the wheels' current roll speeds: $\dot{\phi}_1$, $\dot{\phi}_2$, ...
  - Using the forward kinematic equation we obtain: $\dot{\boldsymbol{\xi}}_R$
  - We can obtain $\dot{\boldsymbol{\xi}}_I$ using our current estimate for θ
  - We apply a first-order Taylor series expansion:

$$\boldsymbol{\xi}_I(t') = \boldsymbol{\xi}_I(t) + (t' - t)\dot{\boldsymbol{\xi}}_I(t) + \cdots$$

  - (The "$\cdots$" represents higher-order terms that we don't bother to include in a first-order approximation)
  - This equation can be applied iteratively to localize the robot over time. However, it will certainly drift as time passes.